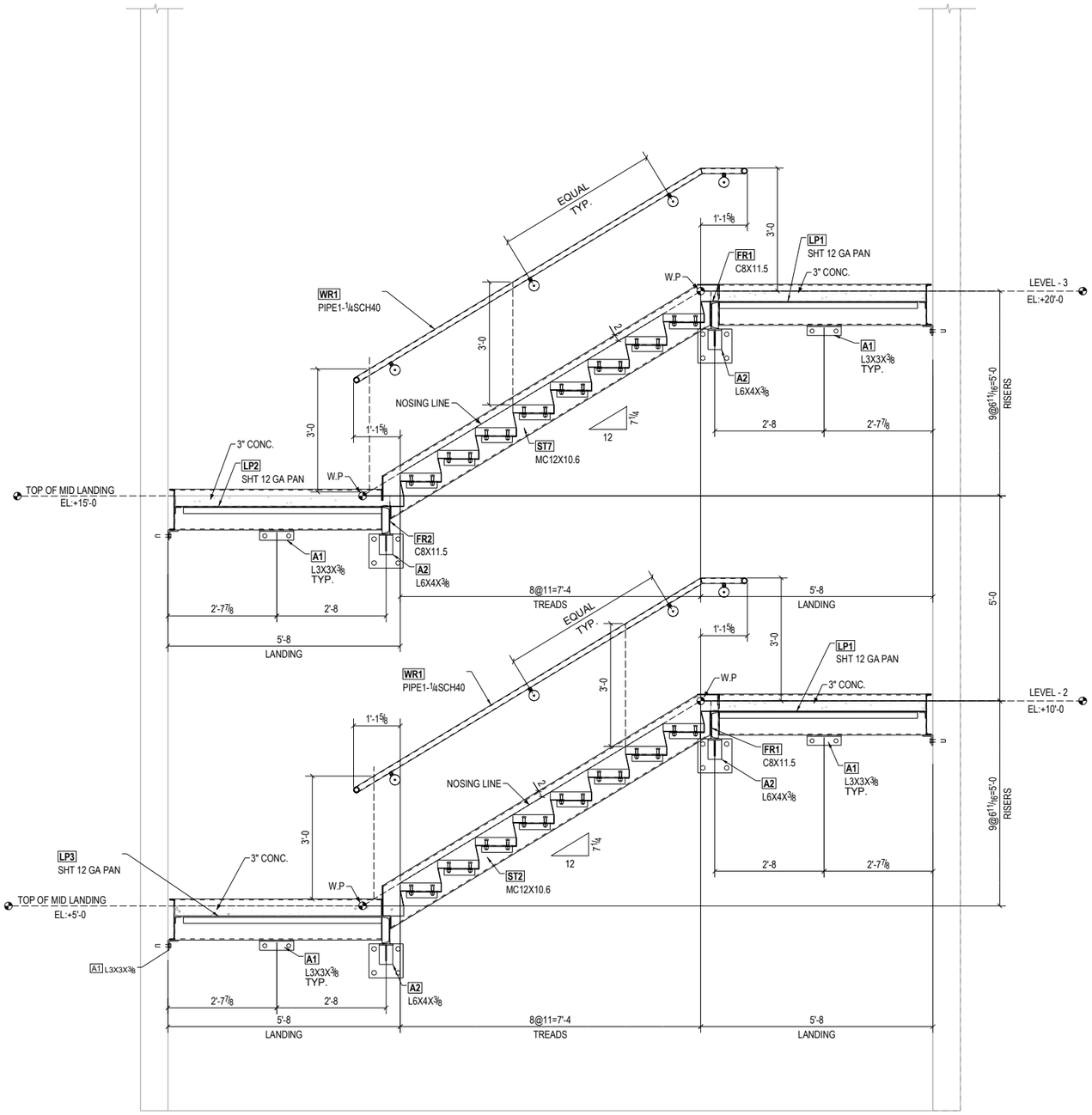

C - C

APPROVER NOTES

1. PLEASE VERIFY AND CONFIRM THE ALL STAIR LAYOUT DIMENSIONS.
2. PLEASE VERIFY AND CONFIRM THE LANDING SUPPORT LOCATING DIMENSIONS.
3. PLEASE VERIFY AND CONFIRM THE ALL ELEVATIONS.

Tekla structures