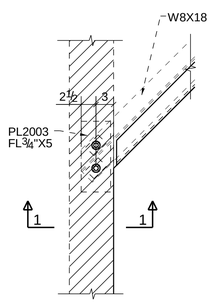

DETAIL 1
AB1

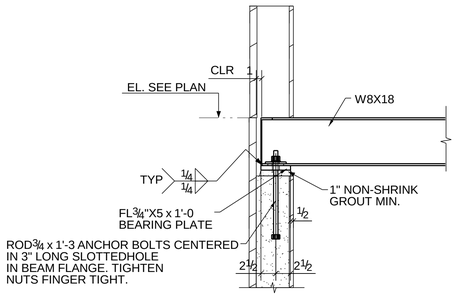

A - A
REF.DWG:54/S5.2

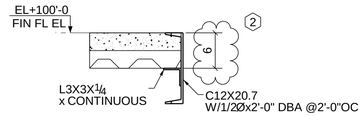

B - B
REF.DWG:43/S5.2
SHEET: E1

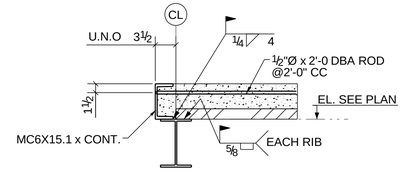

C - C
REF.DWG:42/S5.3
SHEET: E1

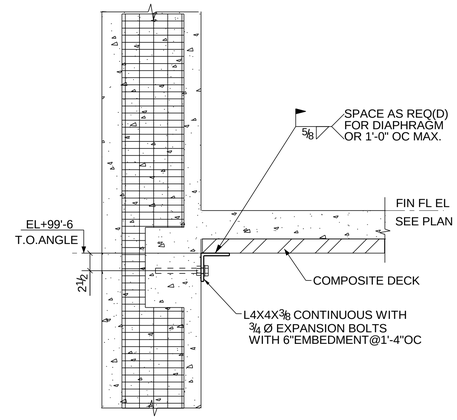

D - D
REF.DWG:44/S4.1
SHEET: E1

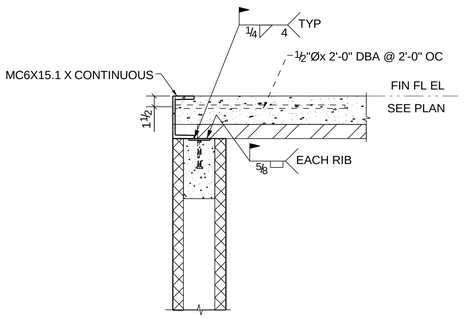

E - E
REF.DWG:41/S5.3
SHEET: E1

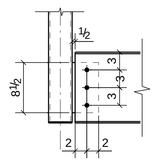

DETAIL 2
REF DWG NO:54/S5.1

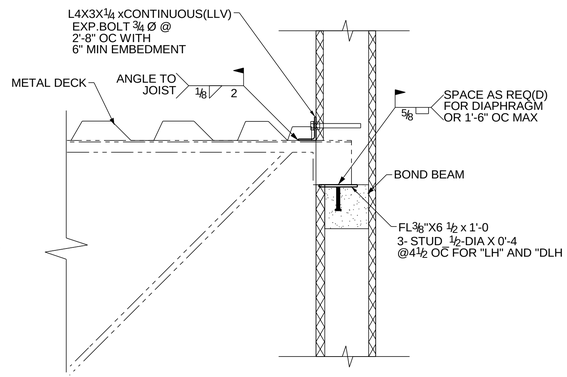

G - G
REF DWG NO:12/S5.1
SHEET: E3

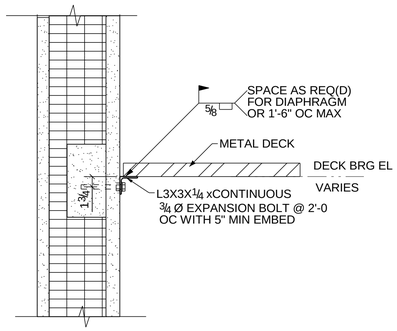

H - H
REF DWG NO:43/S4.1
SHEET: E3

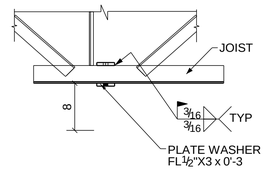

K - K
REF DWG NO:41(B)/S5.2
SHEET E2

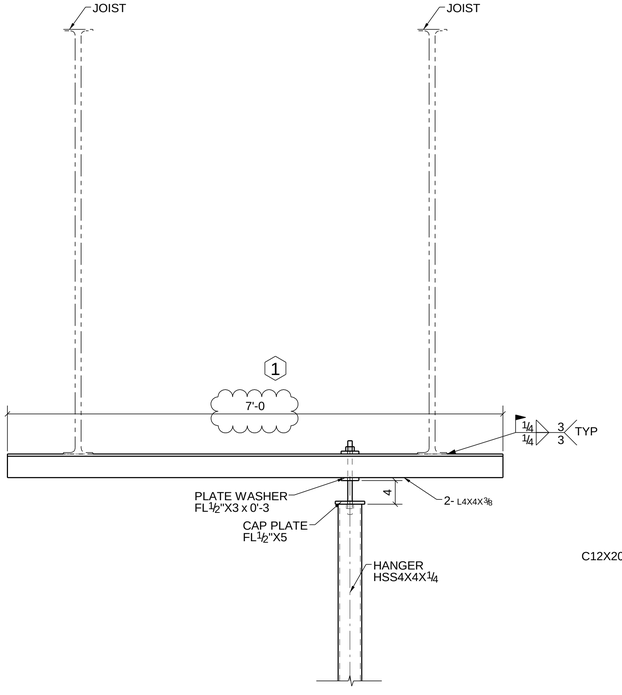

J - J
REF DWG NO:41(C)/S5.2
SHEET: E2

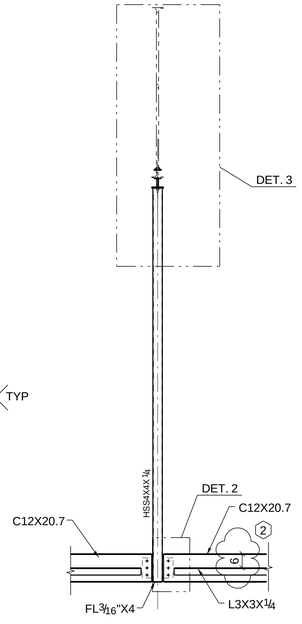

F - F
REF DWG NO:51/S5.2
SHEET: E2

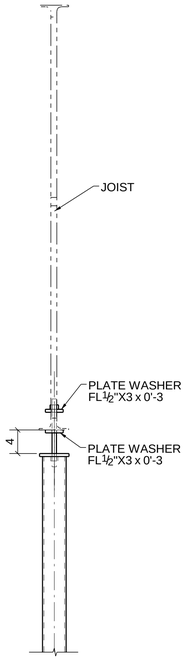

DETAIL 3
REF. DWG:41(A)/S5.2

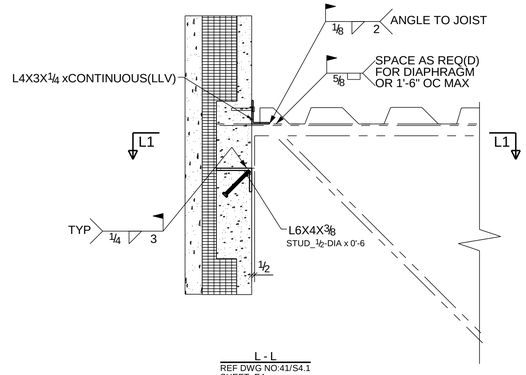

L - L
REF DWG NO:41/S4.1
SHEET: E4

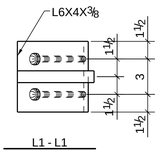

L1 - L1
REF DWG NO:51/S5.2

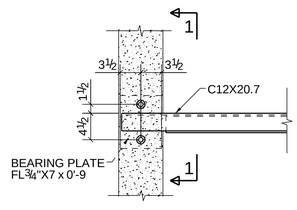

DETAIL-4
REF DWG:52/S5.3

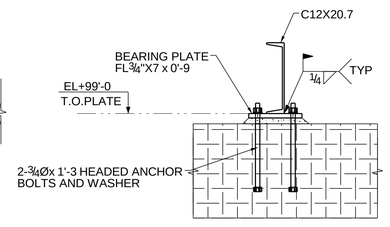

1 - 1

APPROVER NOTE:

1. PLEASE VERIFY AND CONFIRM THE CLOUDED ANGLE LENGTH
2. PLEASE VERIFY AND CONFIRM THE CLOUDED DIMENSION

LEGENDS:

T.O.S	-	TOP OF STEEL
T.O.EP	-	TOP OF EMBED PLATE
T.O.EA	-	TOP OF EMBED ANGLE
EL+	-	ELEVATION
T.O.PL	-	TOP OF PLATE
T.O.A	-	TOP OF ANGLE

Project Description:
Bishop Heelan Gymnasium
2015 East 7th Street, Sioux Ci

CONTRACTOR:
W.A. Klinger, LLC

ERECTION PLAN

DRAWN BY: SSA
DATE: 10/24/2018
S.O. 18-9880
SCALE: NTS
CHECKED BY: TMT

SIOUX CITY FOUNDRY CO.
801 DIVISION STREET SIOUX CITY, IA. 51102
712-252-4181 800-831-0874
(FAX) 712-252-4197
WORK PLANS / SHOP DRAWINGS / STEEL COMPANY
www.siouxcityfoundry.com

Revisions

Rev	Description	Date
A	For Approval	10/24/2018

SHEET
ES1

Tekla structures