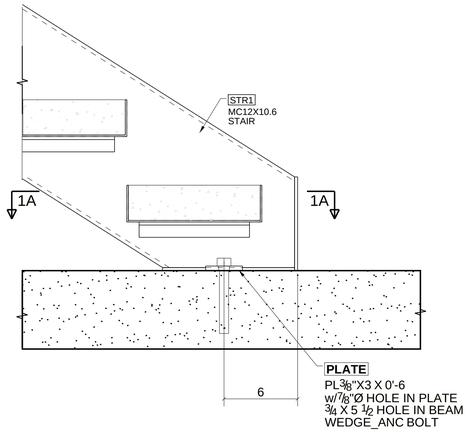

DETAIL - 1
E9

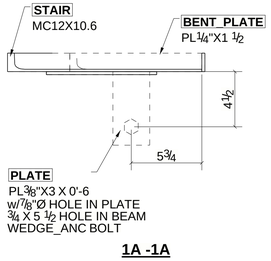

1A -1A

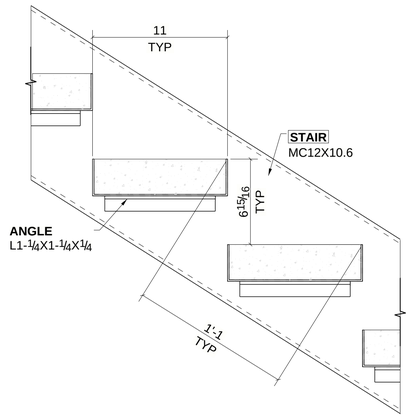

DETAIL 2
E9

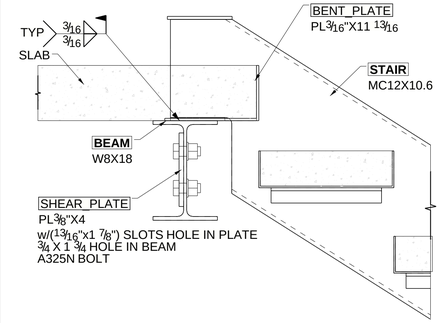

DETAIL-3
E9

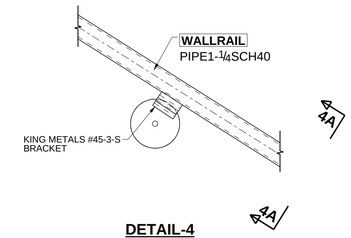

DETAIL-4
E9
TYPICAL WALLRAILBRACKET DETAIL

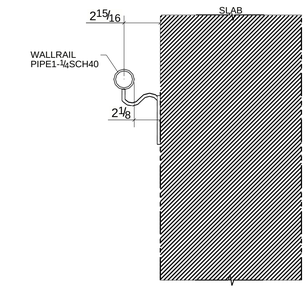

4A - 4A

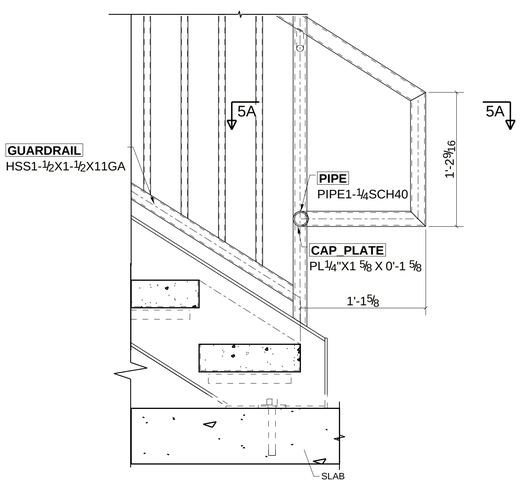

DETAIL-5
E10
TYPICAL HANDRAIL EXTENSION DETAIL

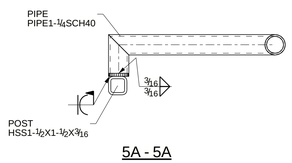

5A - 5A

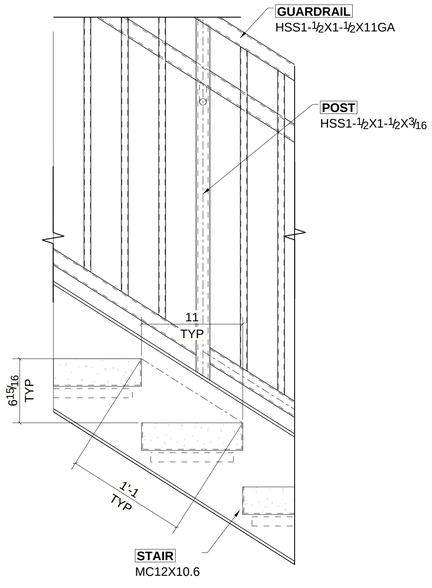

DETAIL-6
E10
TYPICAL OPEN RISERS DETAIL

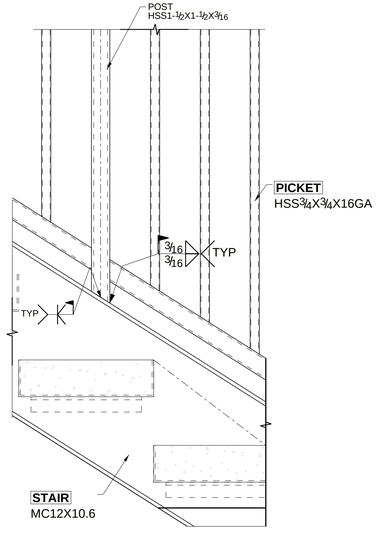

DETAIL-7
E10
TYPICAL STRINGER TO POST DETAIL

REV	DESCRIPTION	DATE
0	For Field Use	10/17/2023
A	For Approval	10/16/2023

LEGEND:

EL - ELEVATION

F.BM.EL - FINISH BASEMENT ELEVATION

F.F.EL - FINISH FLOOR ELEVATION

CLR - CLEARENCE

STEEL GRADE:
PIPE: A53 UNO
TUBE: A500B U.N.O.
PLS ,ANG'S,CHNN'S: A36 UNO
SUR PREP: SSPC-SP2 UNO
WELDS: E70XX UNO
ALL HOLES 13/16 Ø UNO

RICHARDS
WELDING & METAL FABRICATION, LLC
SIEMENS RD. WENDELL, NC 27591
OFFICE: 919-626-0134

VALVOLINE
VALVOLINE-ROCK HILL,SC
DANVILLE, VIRGINIA

SES Helicode Engineering Services

SHEET TITLE	SECTIONS & DETAILS
ARCHITECT	INTERIOR ARCHITECTS
ENGINEER	ARP ENGINEERING
DETAILER	STELCODE ENGINEERING SERVICES

DRAWN BY:	CH	PROJECT No.	1367
CHECK BY:	SWE		
DRA DATE:	10/16/2023		

DRAWING NO: E11

Tekla structures