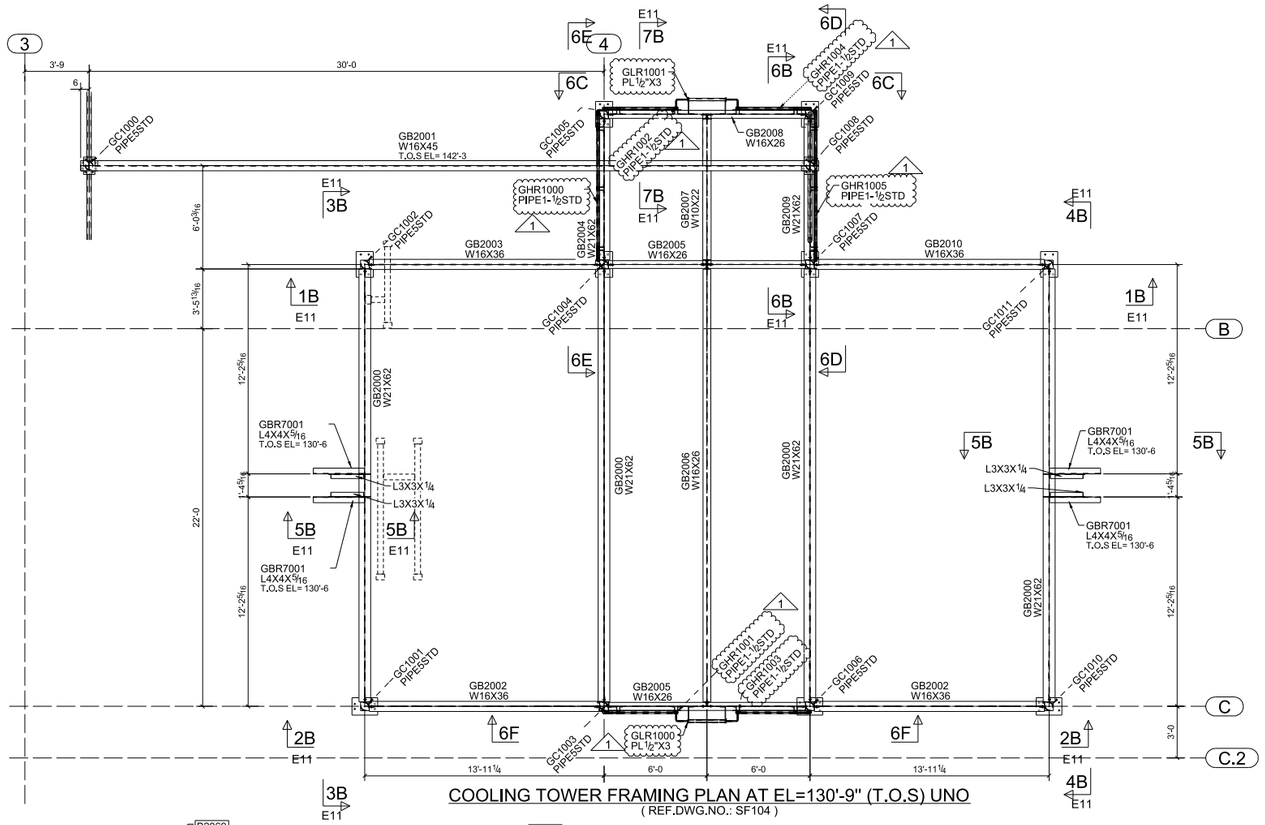

COOLING TOWER FRAMING PLAN AT EL=130'-9" (T.O.S) UNO

(REF.DWG.NO.: SF104)

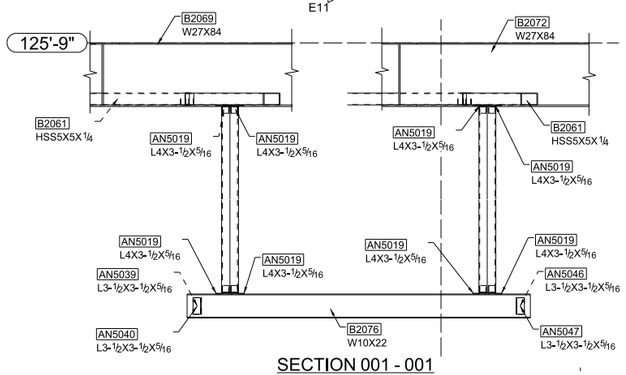

SECTION 001 - 001

E2

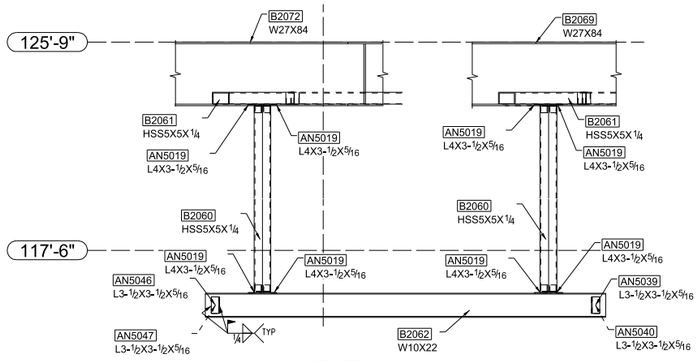

SECTION 002 - 002

E2

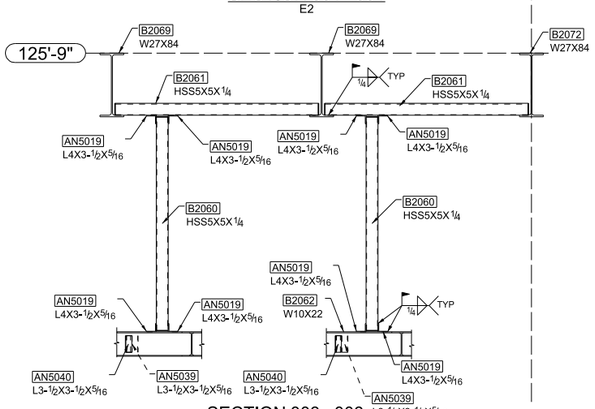

SECTION 003 - 003

E2

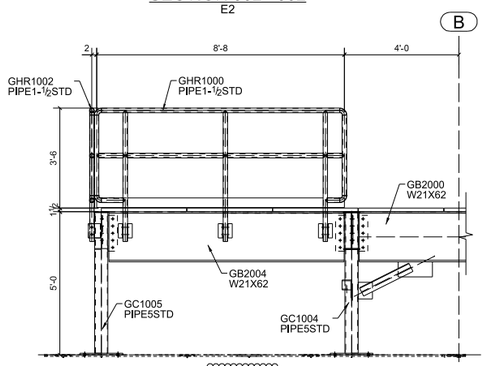

6E - 6E

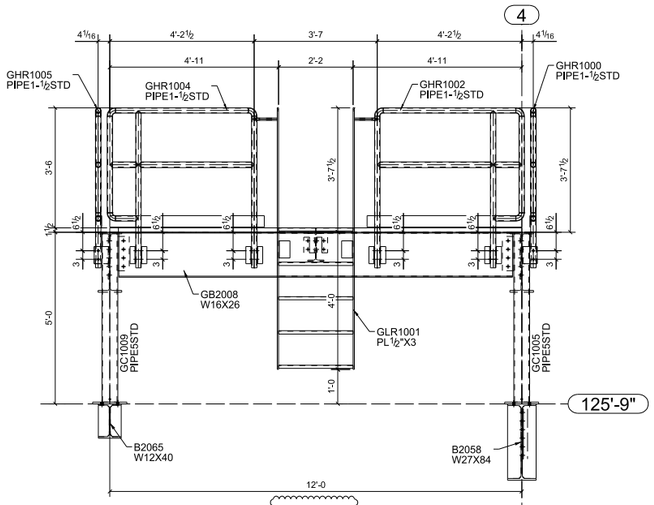

6C - 6C

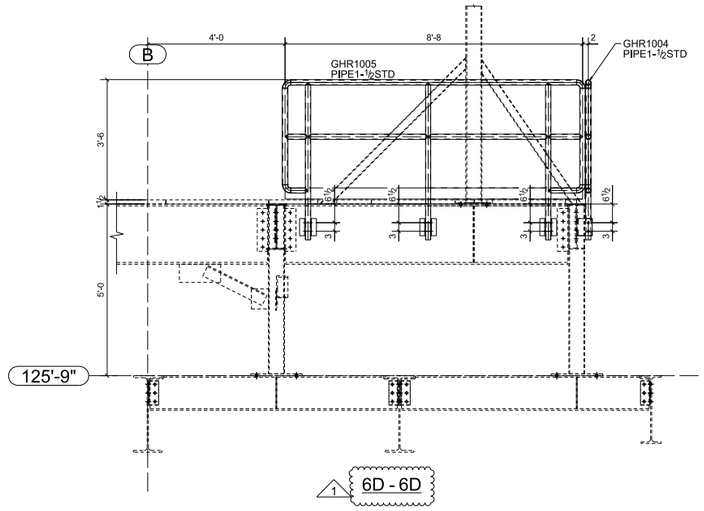

6D - 6D

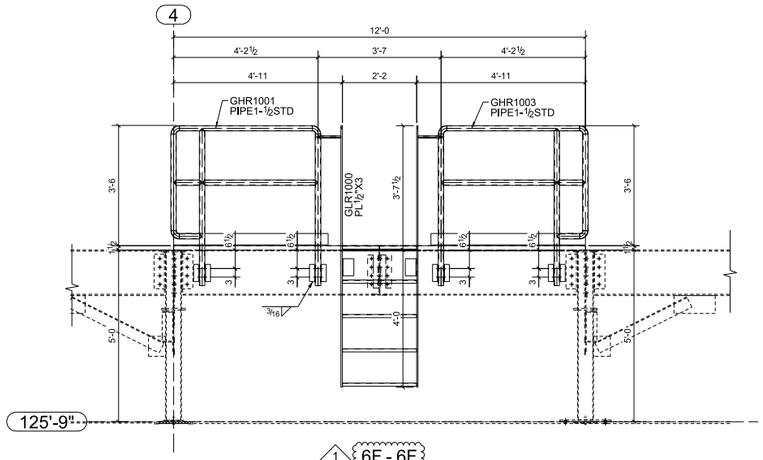

6F - 6F

GENERAL NOTE :-

1. ELEVATIONS SHOWN ON PLAN ARE WITH RESPECT TO FINISHED FLOOR LEVEL 100'-0

2. REFER DWG E3, E11 FOR SECTIONS AND DETAILS.

Tekla structures