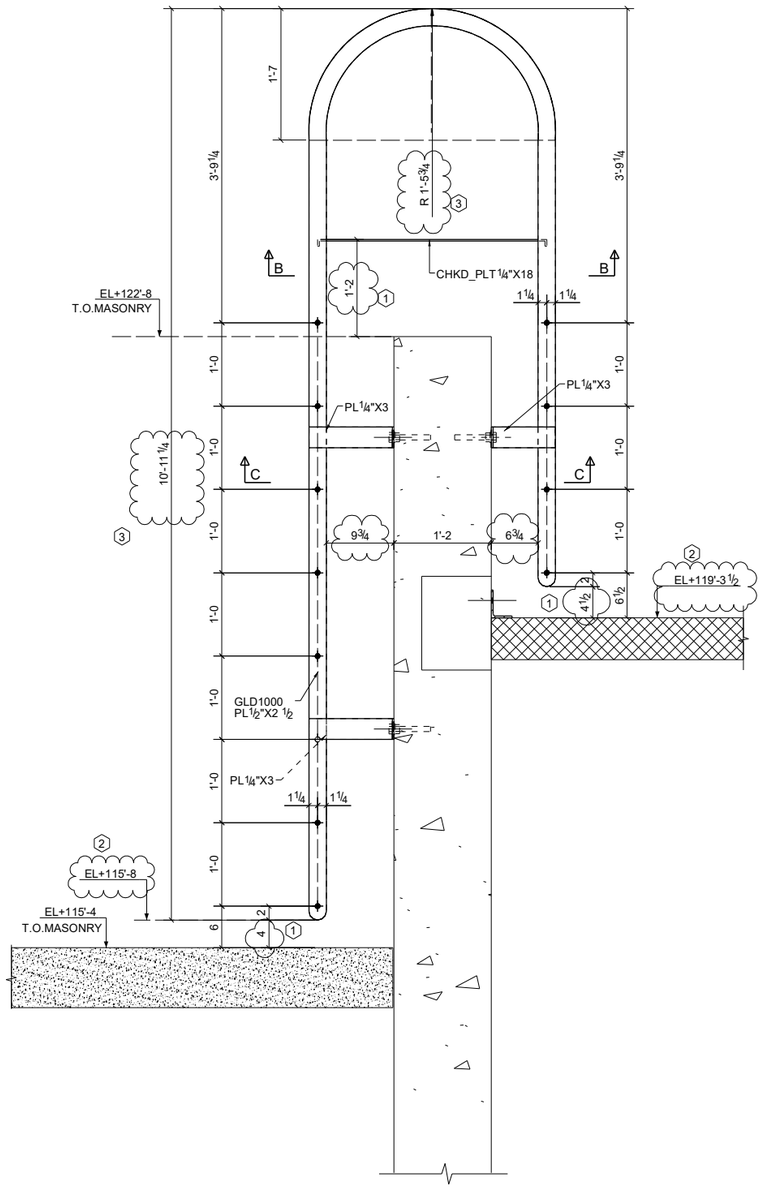

A - A
REF DWG:A/A4.2

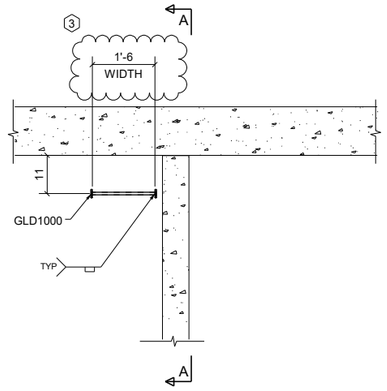

DETAIL 1
E15

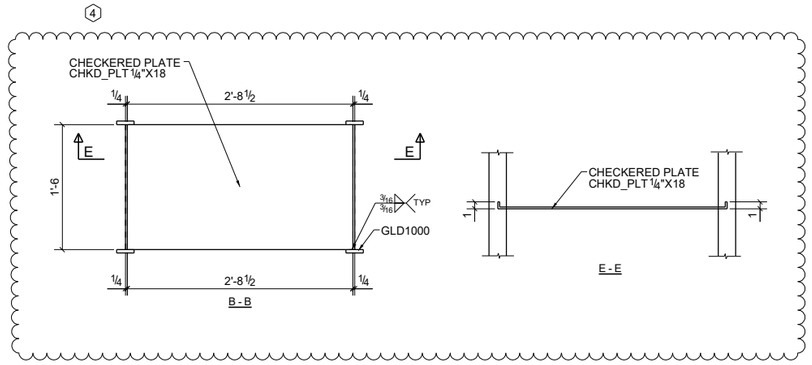

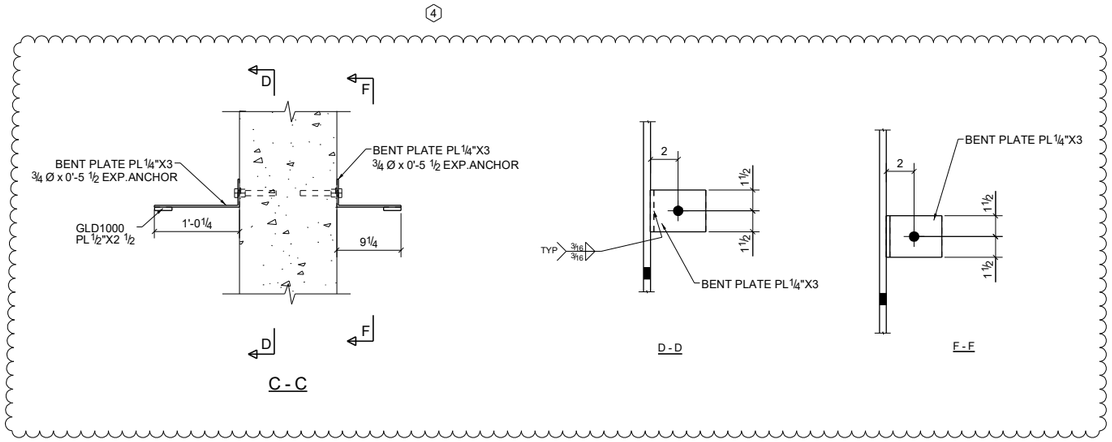

APPROVER NOTE:

PLEASE VERIFY AND CONFIRM THE CLOUDED DIMENSION

PLEASE VERIFY AND CONFIRM THE CLOUDED ELEVATION

PLEASE VERIFY AND CONFIRM THE HEIGHT OF LADDER

PLEASE VERIFY AND CONFIRM THE CLOUDED DIMENSION

PLEASE VERIFY AND CONFIRM THE CLOUDED DETAIL

Tekla structures