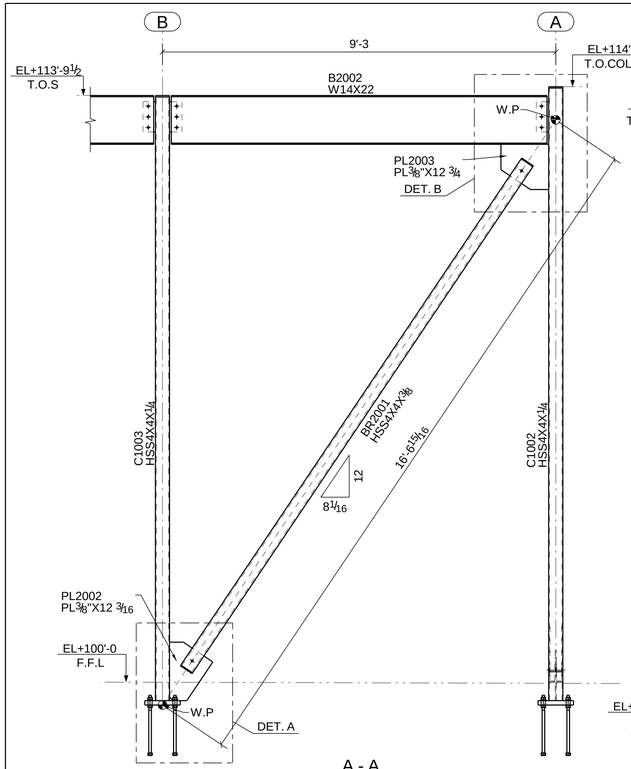

A - A
REF.DWG NO: C1/S-501
E1

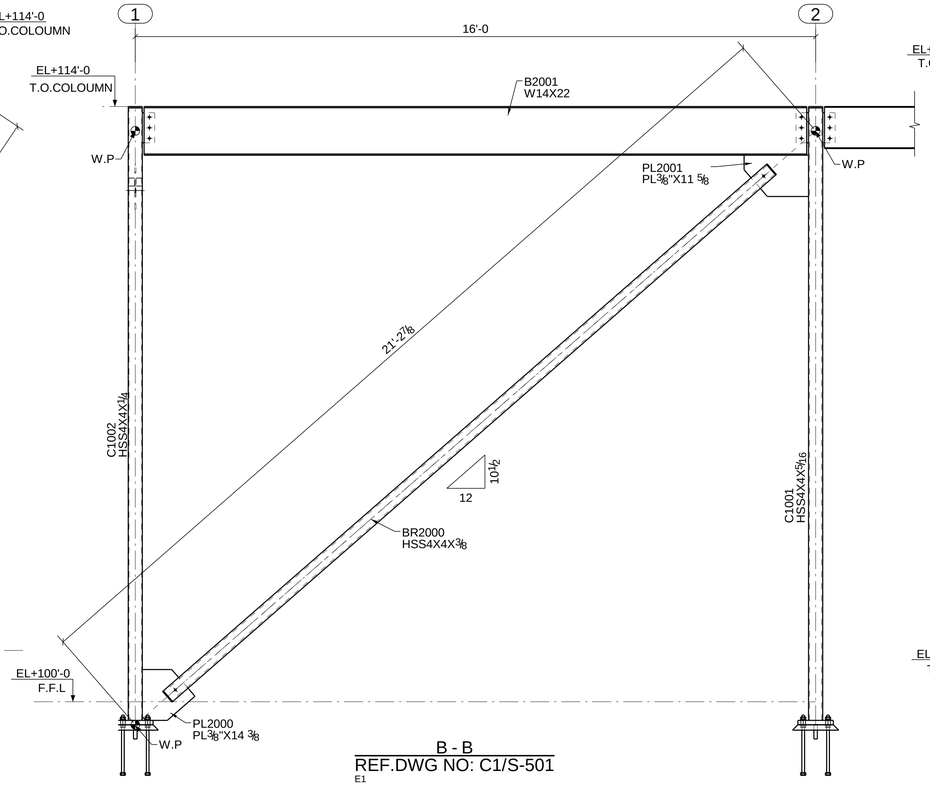

B - B
REF.DWG NO: C1/S-501
E1

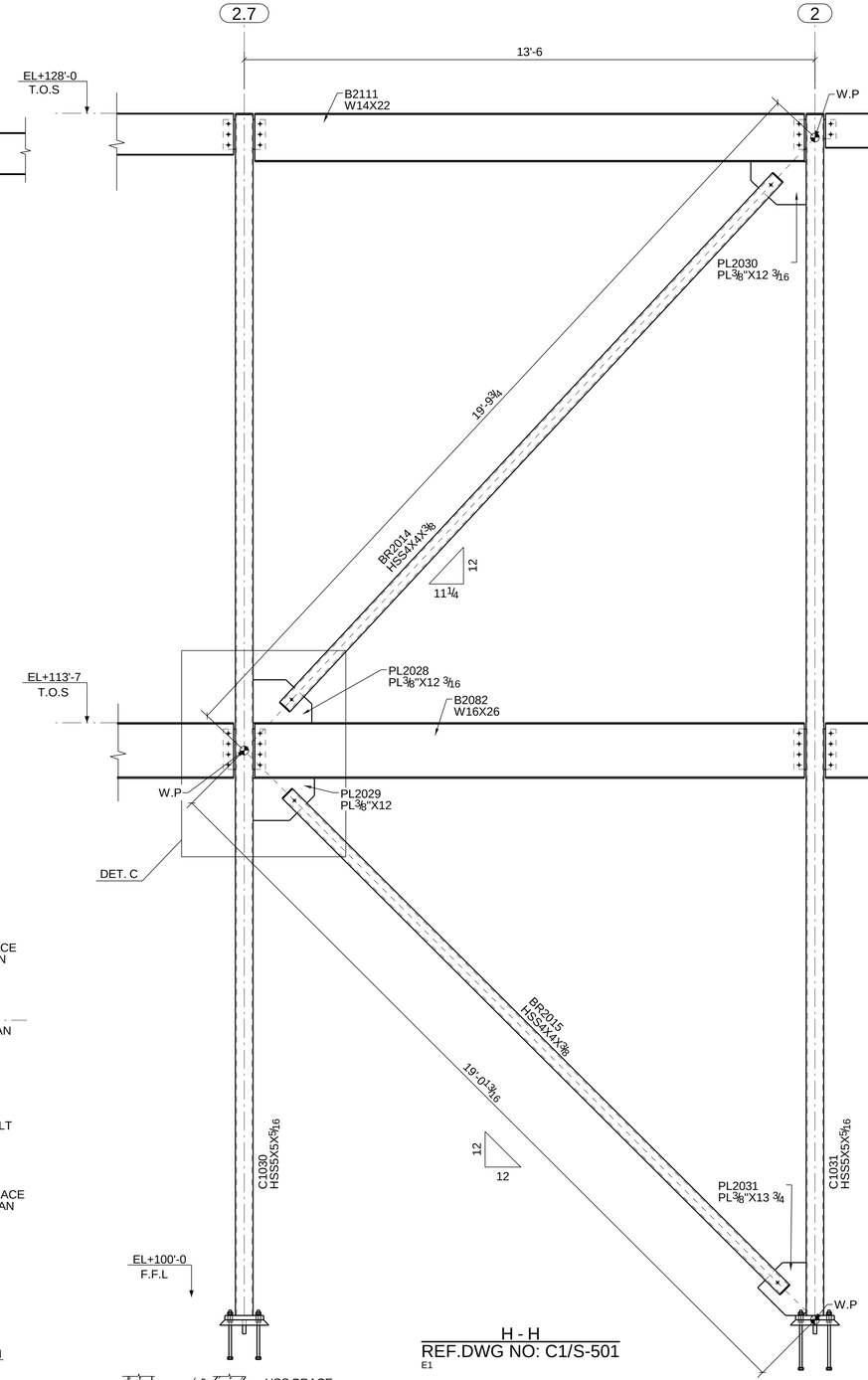

H - H
REF.DWG NO: C1/S-501
E1

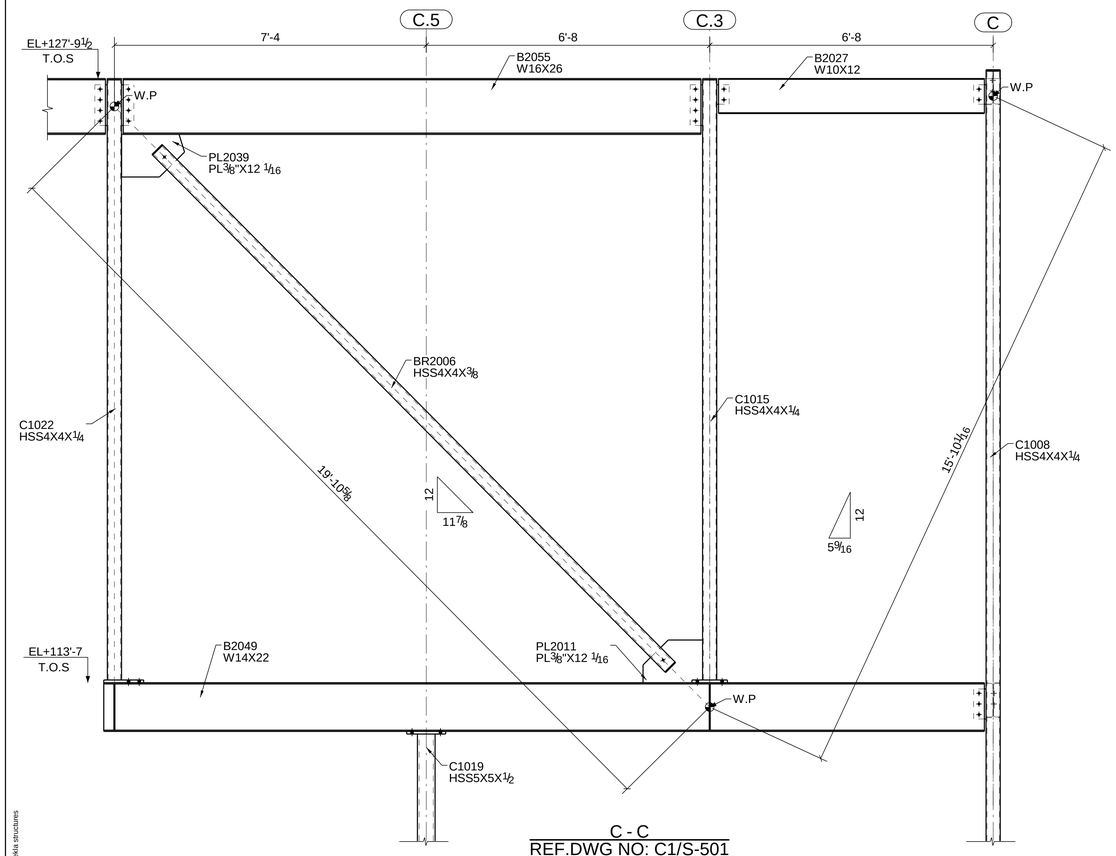

C - C
REF.DWG NO: C1/S-501
E1

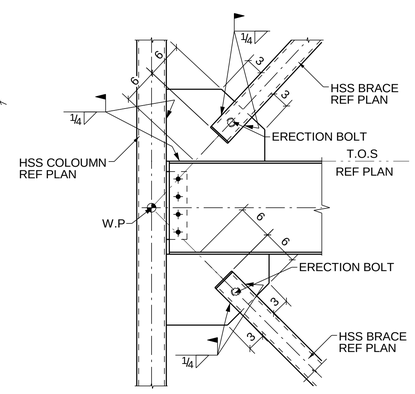

DETAIL C
BRACED FRAME CONNECTION
REF. DWG NO: D2/S-501

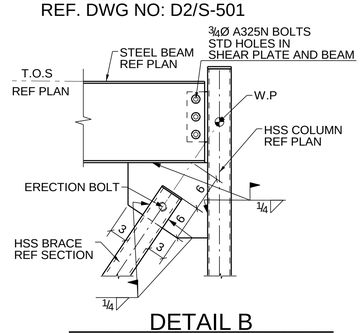

DETAIL B
BRACED FRAME CONNECTION
REF. DWG NO: B3/S-501

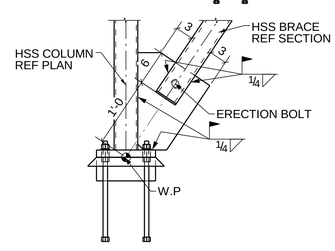

DETAIL A
TYPICAL BRACED FRAME @ FOUNDATION
REF.DWG NO.:C2/S-501

LEGENDS:

T.O.S - TOP OF STEEL

T.O.EA - TOP OF EMBED ANGLE

EL+ - ELEVATION

T.O.PL - TOP OF PLATE

FFL - FINISHED FLOOR LEVEL

Project Description:
South Dakota State University
Brookings, South Dakota 57006

CONTRACTOR:
Clark Drew Construction,Inc

ERECTION PLAN

DRAWN BY: SAS
DATE: 03/18/2019
S.O. 1238874
SCALE: NTS
CHECKED BY: TAM

SIOUX CITY FOUNDRY CO.
801 DIVISION STREET SIOUX CITY, IA. 51102
712-252-4181 800-831-0874
(FAX) 712-252-4197

Revisions

Rev	Description	Date
A	For Approval	01.11.19
B	For RE- Approval	02.04.19
0	For Field Use	03.18.19

SHEET
ES1

Tekla structures